BREATHE HEALTHIER™
GeneralAire®

ERV / HRV Models

Residential Whole-House (GFI #3220, 3160, 8220 & 8160)

GeneralAire® Models ERV/HRV

Energy & Heat Recovery Ventilators

Spec Sheet

Model ERV 3220
(GFI #4675)

Model ERV 3160
(GFI #4670)

Model HRV 8220
(GFI #4665)

Model HRV 8160
(GFI #4660)

	ERV 3160	ERV 3220	HRV 8160	HRV 8220
Dimensions (Inches)	23.875 D x 21.5 H x 11.375 W	23.875 D x 21.5 H x 16.5 W	23.875 D x 21.5 H x 11.375 W	23.875 D x 21.5 H x 16.5 W
CFM	30 to 160	50 to 220	30 to 160	50 to 220
Type Of Exchanger	cross-flow (Enthalpic)	cross-flow (Enthalpic)	cross-flow (Polypropylene)	cross-flow (Polypropylene)
Exchange Surface	85 ft^2	127 ft^2	104 ft^2	150 ft^2
Weight (Pounds)	58	72	53	65
Pallet Quantity	12	9	12	9
Voltage	120 VAC @ 60 Hz	120 VAC @ 60 Hz	120 VAC @ 60 Hz	120 VAC @ 60 Hz
Amperage (Amps)	1.5	1.5	1.5	1.5
Power Consumption (Watts)	130	150	130	150
Defrost Type	Exhaust	Exhaust	Exhaust	Exhaust
Certification	HVI, cCSAus	HVI, cCSAus	HVI, cCSAus	HVI, cCSAus
Warranty (Years)	5 Electronics / 10 Motors / 5 Core		5 Electronics / 10 Motors / *Lifetime* Core	

Included:

Model ERV / HRV, Warranty Card, Installation Manual, 4 Collars, Drain Adapter With Nut, 4 Tie Wraps, Screws, 2 Flexible Vinyl Ducts, Condensation Drain LIne, 4 Washers, SPM™ Attachment Strap System.

Optional Controls:

DC1

DC4E

DHX3

TR3

General Filters Inc.
43800 Grand River Avenue
Novi, Michigan 48375
Toll Free: (866) 476-5101
www.generalaire.com

Canadian General Filters Limited
400 Midwest Rd.
Toronto, ON M1P3A9 Canada
Toll Free: (888) 216-9184
www.cgfproducts.com

BREATHE HEALTHIER™ GeneralAire®

ERV / HRV Models

Residential Whole-House (GFI #3220, 3160, 8220 & 8160)

GeneralAire® Models ERV/HRV

Energy & Heat Recovery Ventilators

Spec Sheet

Wiring Diagrams

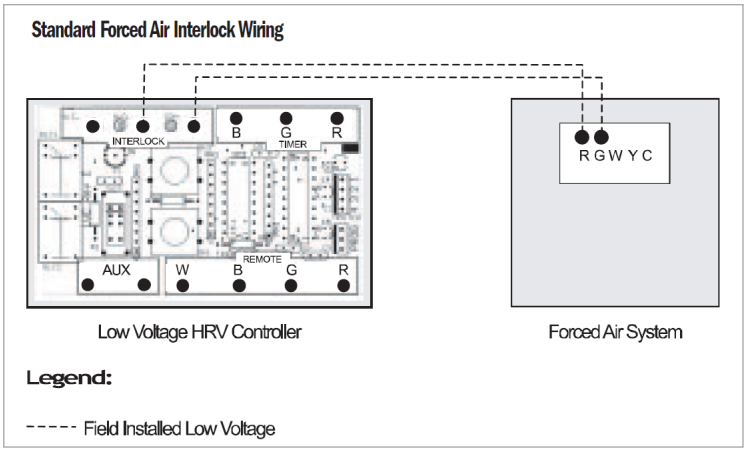

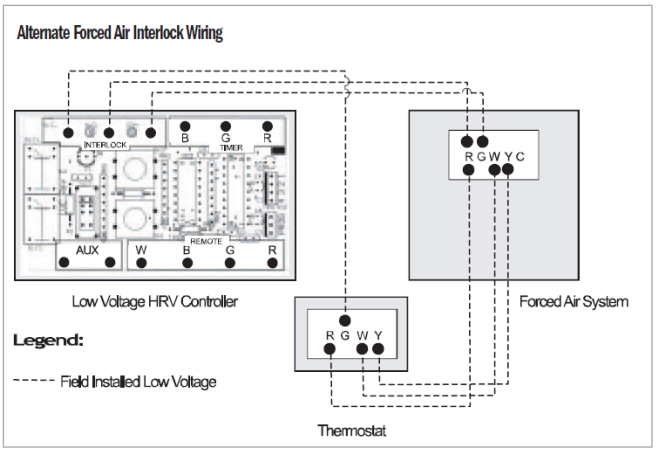

Typical Installations

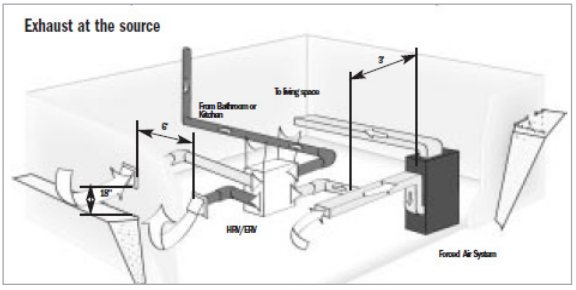

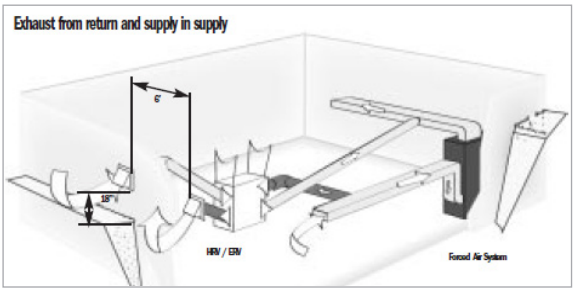

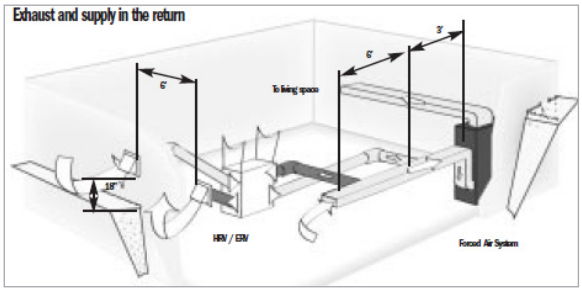

Installation Tips

Ensure at least 72” between the outside fresh air and exhaust air hoods; and place at least 18” from the ground.

Ensure unit is level to ensure proper drainage.

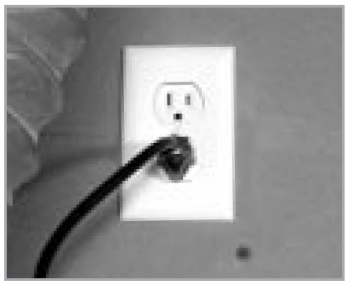

It is recommended that the HRV or ERV have a devoted receptacle with 115V. It is not recommended that you use an extension cord.

Install outside hoods.

Our Brands

General Filters Inc.
43800 Grand River Avenue
Novi, Michigan 48375
Toll Free: (866) 476-5101
www.generalaire.com

Canadian General Filters Limited
400 Midwest Rd.
Toronto, ON M1P3A9 Canada
Toll Free: (888) 216-9184
www.cgfproducts.com

Last Updated: 1-2020

Download online at: www.generalfilters.com/literature/spec/submittal. All information subject to change without notice.

PURE MICHIGAN