Job Name/Location: **Tag #:**

Date: For: ☐ File ☐ Resubmit ☐ Approval ☐ Other_____

PO No.:

Architect: GC:

Engr: Mech:

Rep:
(Company) (Project Manager)

LS090HSV5

Single Zone High Efficiency Standard Wall Mount

Outdoor Unit (ODU) - LSU090HSV5, Indoor Unit (IDU) - LSN090HSV5

LG Life's Good

Performance:

Cooling:

Cooling Capacity (Min~Rated~Max) (Btu/h)	1,023 ~ 9,000 ~ 12,625
SEER	23.5
EER	14.52

SEER - Seasonal Energy Efficiency Ratio EER - Energy Efficiency Ratio

Heating:

Heating Capacity (Min~Rated~Max) (Btu/h)	1,023 ~ 10,900 ~ 17,061
HSPF	11.3
Max. Heating @ Indoor 70°F DB	
Outdoor 19°F DB / 17°F WB	11,080 (102%)
Outdoor 6°F DB / 5°F WB	9,570 (88%)
Outdoor -3°F DB / -4°F WB	8,310 (76%)

HSPF - Heating Seasonal Performance Factor

Cooling Nominal Test Conditions:
Indoor: 80°F DB / 67°F WB
Outdoor: 95°F DB / 75°F WB

Heating Nominal Test Conditions:
Indoor: 70°F DB / 60°F WB
Outdoor: 47°F DB / 43°F WB

Outdoor Unit:

MOP (A)	15
MCA (A)	10
Cooling / Heating Rated Amps (A)	7.4 / 7.4
Compressor (A)	7
Fan Motor (A)	0.4

MOP - Maximum Overcurrent Protection MCA - Minimum Circuit Ampacity

Total Power Input:

Cooling Power Input (kW)	0.62
Heating Power Input (kW)	0.71

Piping:

Liquid Line (in., O.D.)	ø1/4
Vapor Line (in., O.D.)	ø3/8
Additional Refrigerant (oz./ft.)	0.22
Min. / Max. Pipe Length (ft.)[2]	9.8 / 82
Piping Length (no add'l refrig., ft.)	41
Max. Elevation (ft.)	49.2

Controls Features:

- 24-Hour on/off timer
- 4-Way auto swing
- Auto changeover
- Auto restart
- Jet cool/Jet heat
- Built-in low ambient standard, down to 14°F (cooling mode)
- Condensate Sensor Connection
- Inverter (variable speed compressor)
- IDU compatible with Multi F ODUs
- Smart Diagnosis
- 3M Micro Filter
- Self-cleaning indoor coil
- Sleep mode
- Cooling only function
- Built-in Wi-Fi via Smart ThinQ app
- Built-in base pan heater (9/12k; optional for 18k)

Optional Accessories:

- ☐ MultiSITE™ CRC1 - PREMTBVC0
- ☐ MultiSITE CRC1+ - PREMTBVC1
- ☐ MultiSITE Comm. Mgr. - PBACNBTR0A
- ☐ PI-485 - PMNFP14A1
- ☐ Dry Contact - PDRYCB300
- ☐ LonWorks® Gateway - PLNWKB100
- ☐ AC Smart IV BACnet® Gateway - PBACNA000
- ☐ ACP IV BACnet Gateway - PQNFB17C2
- ☐ Base Pan Heater for 18k - PQSH1201
- ☐ Low Ambient Wind Baffle Kit (Cooling to 0°F) - ZLABGP01A

For a complete list of available accessories, contact your LG representative.

Operating Range:

Outdoor Unit:

Cooling (°F DB)	14 ~ 118
Heating (°F WB)	-4 ~ +65

Indoor Unit:

Cooling (°F WB)	53 ~ 75
Heating (°F DB)	60 ~ 86

Electrical:

Power Supply (V/Hz/Ø)	208-230/60/1

System Data:

Refrigerant Type	R410A
Refrigerant Control	EEV
Refrigerant Charge (lbs.)	2.21
ODU Sound Pressure (Cooling / Heating) (±3 dB[A])[3]	45 / 48
IDU Sound Pressure	
Cooling (H/M/L/Sleep) (±3 dB[A])[3]	39 / 33 / 23 / 19
Heating (H/M/L) (±3 dB[A])[3]	39 / 33 / 23
ODU Net / Shipping Weight (lbs.)	74.1 / 78.9
IDU Net / Shipping Weight (lbs.)	18.3 / 25.6
Heat Exchanger Coating	GoldFin™

Fan:

ODU Type	Propeller
IDU Type	Cross Flow
Fan Speeds (Fan/Cool/Heat)	6 / 6 / 6
Quantity (ODU + IDU)	1 + 1
Motor/Drive	Brushless Digitally Controlled/Direct
ODU Max. Air Flow Rate (CFM)	1,165
IDU Air Flow	
Cooling, Max/H/M/L (CFM)	459 / 338 / 317 / 194
Heating, Max/H/M/L (CFM)	459 / 338 / 317 / 229
Dehumidification (pts./hr.)	2.7

Notes:

1. Acceptable operating voltage: 187V-253V.
2. Piping lengths are equivalent.
3. Sound Pressure levels are tested in an anechoic chamber under ISO Standard 3745.
4. All communication / connection (power) cable from the outdoor unit to the indoor unit is field supplied and is to be minimum four-conductor, 18 AWG, stranded, shielded or unshielded (if shielded, it must be grounded to the chassis of the outdoor unit only), and must comply with applicable local and national codes.
5. See Engineering Manual for sensible and latent capacities.
6. Power wiring cable size must comply with the applicable local and national code.
7. The indoor unit comes with a dry helium charge.
8. This data is rated 0 ft. above sea level, with 24.6 ft. of refrigerant line and a 0 ft. level difference between outdoor and indoor units.
9. Must follow installation instructions in the applicable LG installation manual.
10. Multi compatible 18k IDUs include socket adapters for refrigerant pipe connections with Multi F systems.

BACnet® is a registered trademark of ASHRAE. LonWorks® is a trademark of Echelon Corporation.

ENERGY STAR

Intertek

AHRI CERTIFIED™ www.ahridirectory.org
Unitary Small AC
AHRI Standard 210/240
Certification applies only when the complete system is listed with AHRI

For continual product development, LG reserves the right to change specifications without notice.
© LG Electronics U.S.A., Inc., Englewood Cliffs, NJ. All rights reserved. "LG Life's Good" is a registered trademark of LG Corp. /www.lghvac.com

Job Name/Location: _____

LS090HSV5

Single Zone High Efficiency Standard Wall Mount

Outdoor Unit (ODU) - LSU090HSV5, Indoor Unit (IDU) - LSN090HSV5

Tag No.: _____

Date: _____

PO No.: _____

Unit : Inch (mm)

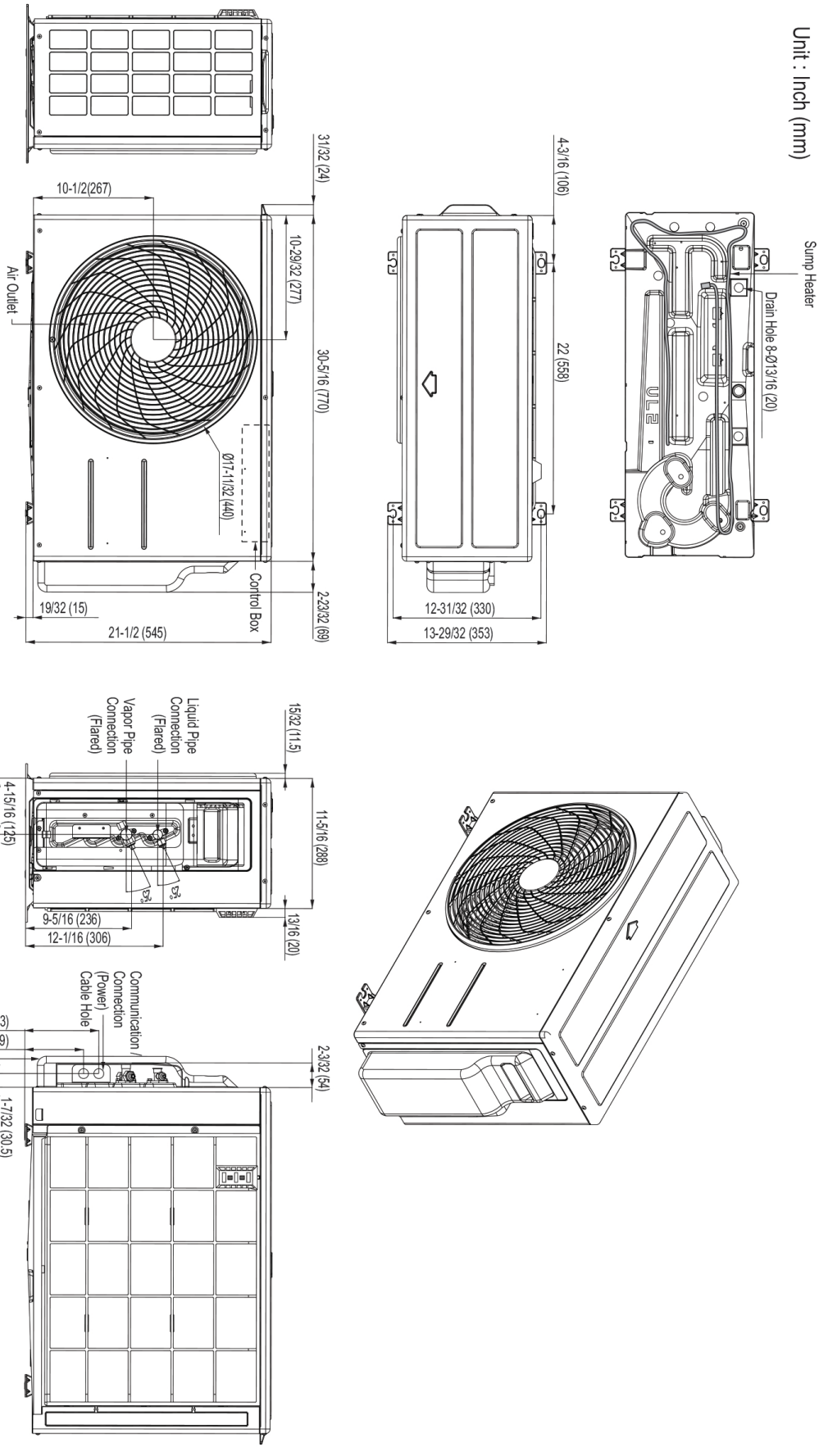

For continual product development, LG reserves the right to change specifications without notice.
© LG Electronics U.S.A., Inc., Englewood Cliffs, NJ. All rights reserved. "LG Life's Good" is a registered trademark of LG Corp. /www.lghvac.com

Job Name/Location: _____

LS090HSV5

Single Zone High Efficiency Standard Wall Mount

Outdoor Unit (ODU) - LSU090HSV5, Indoor Unit (IDU) - LSN090HSV5

Tag No.: _____

Date: _____

PO No.: _____

Unit : Inch (mm)

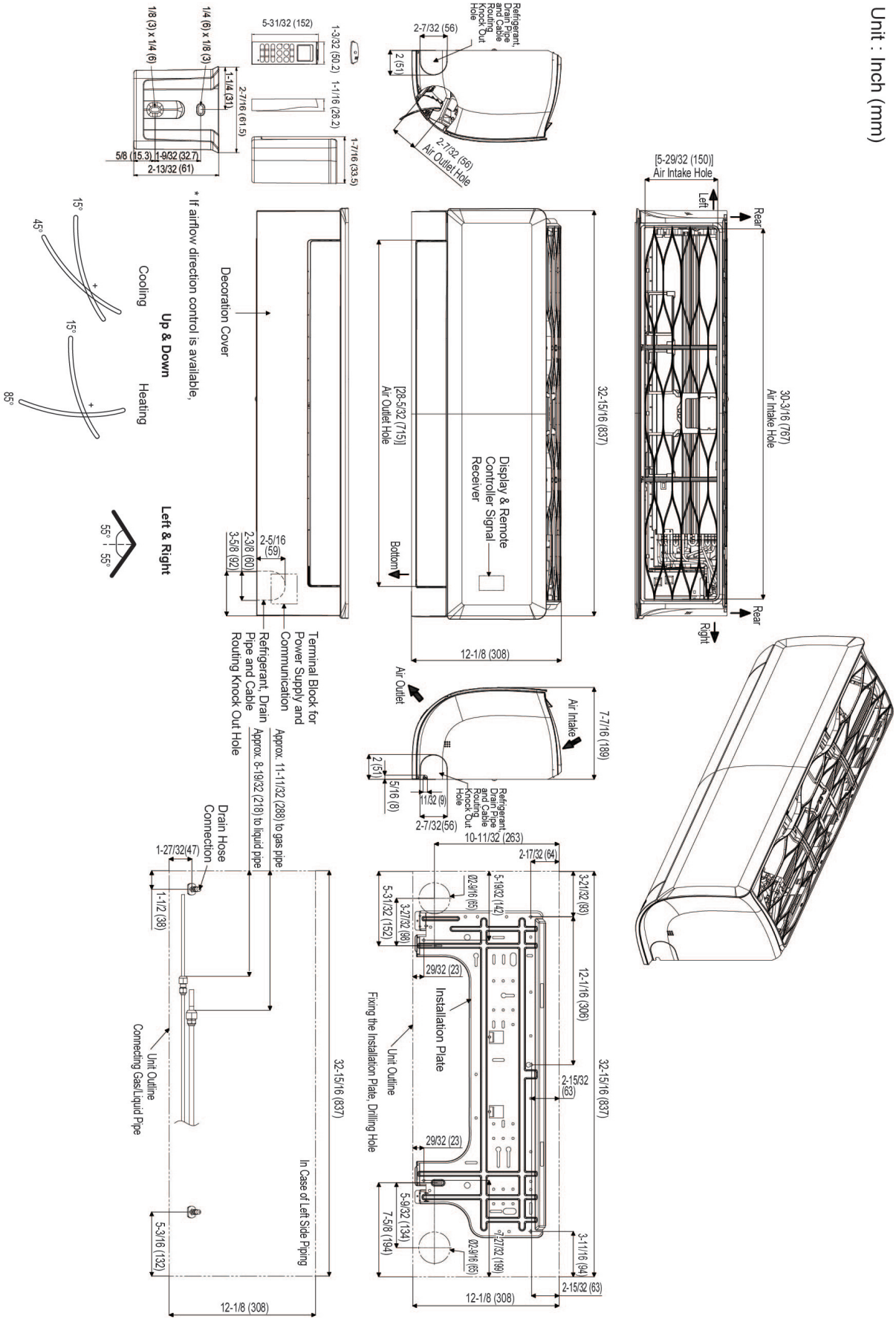

For continual product development, LG reserves the right to change specifications without notice.
© LG Electronics U.S.A., Inc., Englewood Cliffs, NJ. All rights reserved. "LG Life's Good" is a registered trademark of LG Corp. /www.lghvac.com