Job Name/Location: **Tag #:**

Date:

PO No.:

For: ☐ File ☐ Resubmit ☐ Approval ☐ Other

Architect: GC:

Engr: Mech:

Rep:
(Company) (Project Manager)

LMU36CHV
Multi F Inverter Heat Pump Outdoor Unit

LG Life's Good

Performance:

Nominal Cooling Capacity (Btu/h)	34,000
Nominal Heating Capacity (Btu/h)	41,000
Cooling Power Input (kW)	2.46
Heating Power Input (kW)	2.74

Cooling Nominal Test Conditions:
Indoor: 80°F DB/67°F WB
Outdoor: 95°F DB/75°F WB

Heating Nominal Test Conditions:
Indoor: 70°F DB/60°F WB
Outdoor: 47°F DB/43°F WB

Electrical:

Power Supply (V[1]/Hz/Ø)	208-230/60/1
MOP (A)	25
MCA (A)	17.9
Cooling Rated Amps (A)	15.13
Heating Rated Amps (A)	15.13
Compressor (A)	11.2
Fan Motor (A)	0.73

MOP - Maximum Overcurrent Protection MCA - Minimum Circuit Ampacity

Piping:

Refrigerant Charge (lbs)	6.18
Liquid Line (in, OD)	1/4 x 4
Vapor Line (in, OD)	3/8 x 4
Max Total Piping[2] (ft)	246.1
Max ODU to IDU Piping (ft)	82
Piping Length (no add'l refrigerant, ft)	98.4
Max Elevation between ODU and IDU (ft)	49.2
Max Elevation between IDU and IDU (ft)	24.6

ODU - Outdoor Unit IDU - Indoor Unit

Controls Features:

- Auto operation
- Auto restart operation
- Defrost/Deicing
- Inverter (variable speed compressor)
- Built-in low ambient standard down to 14F
- Restart delay (3-minutes)
- Self diagnosis
- Soft start

Optional Accessories:

- ☐ PI-485 Integration Board - PMNFP14A0
- ☐ AC Smart Premium - PQCSW421E0A
- ☐ AC Ez - PQCSZ250S0
- ☐ Power Distribution Indicator - PQNUD1S00

For a complete list of available accessories, contact your LG representative.

Operating Range:

Cooling (°F DB)	14-118
Heating (°F WB)	-4-64

Unit Data:

Refrigerant Type	R410A
Refrigerant Control	EEV
Sound Pressure[3] (Cool/Heat) ±3 dB(A)	52/55
Net Unit Weight (lbs)	137
Shipping Weight (lbs)	148
Heat Exchanger Coating	GoldFin™
Min Number of Indoor Units	2
Max Number of Indoor Units	4

Compressor:

Quantity	1
Type	Twin Rotary
Oil/Type	FVC68D

Fan:

Type	Propeller
Quantity	1
Fan Motor/Drive	Brushless Digitally Controlled/Direct
Airflow Rate (CFM)	2119

Notes:

1.Acceptable operating voltage: 187V-253V.
2.Piping lengths are equivalent.
3.Sound Pressure levels are tested in an anechoic chamber under ISO Standard 1996.
4.All power/communication cable to be minimum 18 AWG, 4-conductor, stranded, shielded and must comply with applicable local and national code.
5.Power wiring cable size must comply with the applicable local and national code.
6.See Engineering Manual for sensible and latent capacities.
7.Power wiring cable size must comply with the applicable local and national code.
8.This data is rated 0 ft above sea level, with 24.6 ft of refrigerant line and a 0 ft level difference between outdoor and indoor units. All capacities are net with a combination ratio between 95 – 105%.
9.Refer to the Engineering Product Data Book for combination capacity tables.
10.Must follow installation instructions in the applicable LG installation manual.

Intertek

Inverter

AHRI CERTIFIED™ www.ahridirectory.org
Unitary Small AC
AHRI Standard 210/240
Certification applies only when the complete system is listed with AHRI.

For continual product development, LG reserves the right to change specifications without notice.
©LG Electronics U.S.A., Inc., Englewood Cliffs, NJ. All rights reserved. "LG Life's Good" is a registered trademark of LG Corp. /www.lghvac.com.

LMU36CHV

Multi F Inverter Heat Pump Outdoor Unit

Tag #:

Date:

PO No.:

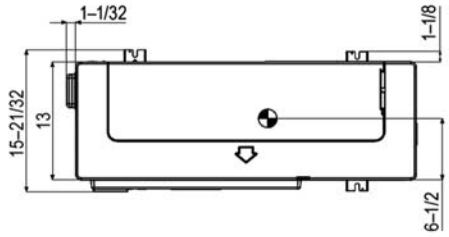

Unit: inch

Center of Gravity

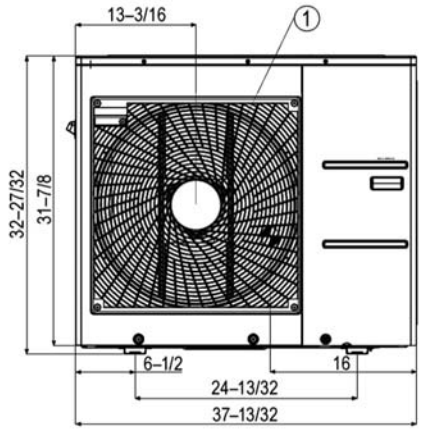

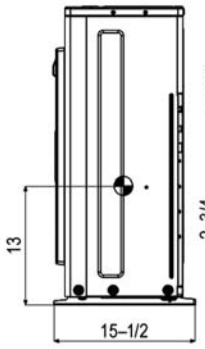

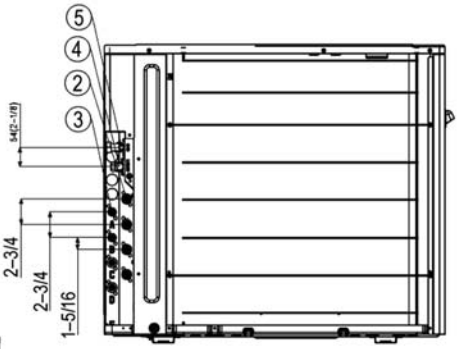

No.	Part Name
1	Air discharge grille
2	Gas pipe connection
3	Liquid pipe connection
4	Main service valve(Liquid)
5	Main service valve(Gas)

For continual product development, LG reserves the right to change specifications without notice.
©LG Electronics U.S.A., Inc., Englewood Cliffs, NJ. All rights reserved. "LG Life's Good" is a registered trademark of LG Corp. /www.lghvac.com.