IM-PLC-0667392-05
February 2018

Advanced Distributor Products®

Installation Instructions

PL Series

Premier Indoor Plenum Coils

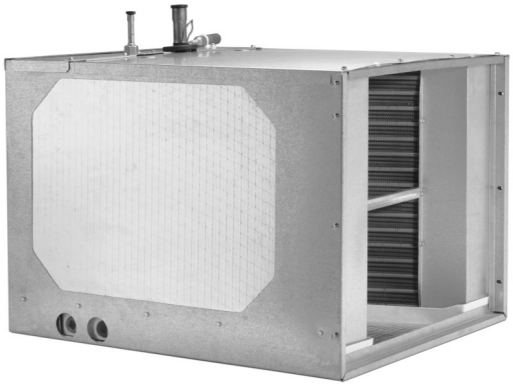

GENERAL

ADP evaporator coils are designed for use with condensing units or heat pump units. These instructions are intended as a general guide and do not supersede local codes in any way. Consult with local authorities having jurisdiction before installation. **Read this installation manual and all "Warning" statements prior to installing the evaporator coil.**

Check coil for shipping damage and verify package contents. If you should find damage, immediately contact the last carrier. Verify the efficiency or performance requirements, such as SEER, EER, and/or HSPF, are appropriate with the matched condensing or heat pump units. See AHRI ratings directory for more information. Check outdoor unit manufacturer for proper line sizing. **Coils are shipped with a 10 psi dry air holding charge. Puncture rubber plug on suction line to release charge before removing plugs.** The absence of pressure does not verify a leak. Check the coil for leaks before installing or returning it to your wholesaler.

SAFETY CONSIDERATIONS

Your safety and the safety of others are very important.

We have provided many important safety messages in this manual and on your appliance. Always read and obey all safety messages.

This is the safety alert symbol.

This symbol alerts you to potential hazards that can kill or hurt you and others.

All safety messages will follow the safety alert symbol and signal word. These signals words mean the following:

DANGER: You can be **killed or seriously injured** if you don't immediately follow instructions.

WARNING: Indicate a potentially hazardous situation which, if not avoided, could result in **death or serious injury**.

CAUTION: Indicates a potentially hazardous situation which, if not avoided, may result in **minor or moderate injury**. Caution may also be used to alert against unsafe practices.

NOTICE: Indicates a statement of company policy as the message relates directly or indirectly to the safety of personnel or protection of property.

IMPORTANT: More detailed information concerning the statement of company policy as the message relates directly or indirectly to the safety of personnel or protection of property.

All safety messages will tell you what the potential hazard is, tell you how to reduce the chance of injury, and tell you what can happen if the instructions are not followed.

AHRI CERTIFIED™ www.ahridirectory.org ISO 9001:2008 Registered Quality System c UL us HealthySolutions® Premier evaporator coils PROTECTION THAT LIVES ON MICROBAN®

Product improvement is a continuous process at Advanced Distributor Products. Therefore, product specifications are subject to change without notice and without obligation on our part. Please contact your ADP representative or distributor to verify details.

© by Advanced Distributor Products. All rights reserved.

2175 West Park Place Blvd., Stone Mountain, GA 30087
www.adpnow.com

PLENUM COIL

Drain Pans

- Drain pans are made of a polymer that can withstand temperatures up to 450°F.
- **Maintain a 3" clearance on drum type heat exchangers and 1½" on sectionalized heat exchangers.**
- Coil should be pitched approximately 1/2" toward the drain connections.*

Airflow

- Low airflow below 360 CFM per 12,000 BTUH can lead to coil freeze-up problems.
- Improper airflow across the evaporator coil can cause component or system problems.

Plenum Coils are designed for horizontal applications only. Proper performance requires that the air flow into the wide part of the A and out the tip of the A as shown in Figure 1.

WARNING

This product may contain fiberglass wool insulation. Glass wool fibers are known to the State of California to cause cancer. Disturbing insulation during installation, maintenance, or repair may expose you to glass wool fibers and may cause respiratory, skin or eye irritation. For further information on risks associated with fiberglass wool, consult Material Safety Data Sheet available from OEM.

IMPORTANT

For proper operation, after brazing, attach and insulate the TXV sensor bulb at a 10 to 2 o'clock position to the main suction line no more than one foot from the suction line connection. If necessary, the bulb can be installed on a vertical suction line. In this instance, the bulb must be placed before any trap, with the bulb's capillary tube facing upward.

FIGURE 1

Air Flow Direction for Plenum Coils

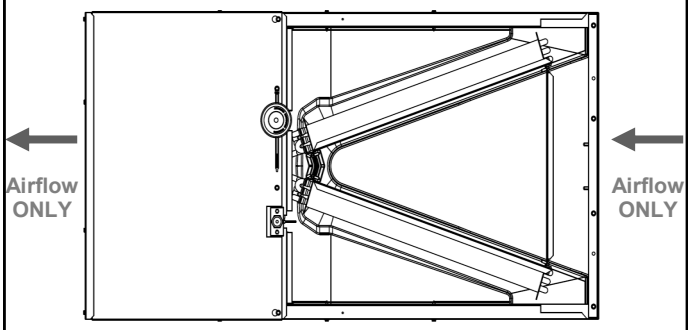

* Sloping over 5/8" may cause blow off into the auxiliary drain hole in high static situations.

METERING DEVICE

Coils are suited for R-22 and R-410A refrigerants and can be used with or without a TXV. Replacement TXV part numbers are listed below; see kit instructions for change out or installation. PL Series coil are shipped with the TXV sensing bulb uninstalled. For optimum performance, attach and insulate the bulb at a 10 to 2 o'clock position outside of the cabinet to the main suction line no more than one foot from the suction line connection. When changing a system from AC to heat pump or heat pump to AC, check the current TXV specifications to determine if a TXV replacement is required. **If the evaporator coil contains a non-bleed TXV and is used with a condensing unit containing a reciprocating compressor, a hard start mechanism will be required on the outdoor unit.**

IMPORTANT

When changing the metering device, ensure the metering device matches the refrigerant type and capacity of the condensing unit. Failure to do so will result in poor performance and possible compressor damage. All coils must be matched properly as listed in the AHRI directory.

R-22 TXV Part Numbers	
18-36 MBTUH Bleed A/C	65540600
42-60 MBTUH Bleed A/C	65540700
18-36 MBTUH Non-Bleed A/C	99167501
42-60 MBTUH Non-Bleed A/C	99167502
18-36 MBTUH Non-Bleed A/C-HP	65616201
42-60 MBTUH Non-Bleed A/C-HP	65616202

R-410A TXV Part Numbers	
18-36 MBTUH Non-Bleed A/C	65026401
42-60 MBTUH Non-Bleed A/C	65026400
18-36 MBTUH Non-Bleed A/C-HP	65616601
42-60 MBTUH Non-Bleed A/C-HP	65616602
18-36 MBTUH Bleed A/C	67304001
42-60 MBTUH Bleed A/C	67304002
18-36 MBTUH Bleed A/C-HP	67304101
42-60 MBTUH Bleed A/C-HP	67304102

For optimum performance, the piston should be sized to match the recommendation from the outdoor unit manufacturer. If the outdoor unit manufacturer does not recommend a piston size, refer to the piston size chart below.

When changing ADP pistons, refer to Figure 2 and use the following procedure:

1. Loosen hex nut located on liquid line and separate from distributor assembly.
2. Remove the existing piston from inside the distributor assembly.
3. Insert the desired piston into the distributor assembly.
4. Inspect Teflon O-ring and replace if damaged. Ensure Teflon O-ring is in place.
5. Re-install hex nut to body and torque to 10 ft-lbs.

FIGURE 2

Side View of Piston Orifice

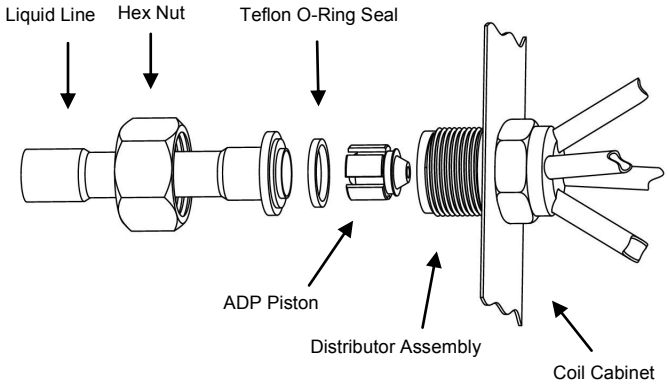

Piston Size				
Ton	R-22		R-410A	
	Piston Size	Part Number	Piston Size	Part Number
1	41	100000035	41	100000035
1.5	53	100000036	49	100000049
2	59	100000037	53	100000036
2.5	67	100000039	59	100000037
3	73	100000041	67	100000039
3.5	80	100000044	73	100000041
4	84	100000045	76	100000042
5	93	100000047	93	100000047

FURNACE ATTACHMENT

Align the bottom edges of the coil and furnace—the included furnace mount bracket (Figure 3) may be attached to the coil with 2 screws. Attach coil to furnace flanges using sheet metal screws. Seal according to local codes.

Coil Support Options

1. Support from bottom using furnace stands.
2. Attach hanging straps to back end of sheet metal.

Coil should be level or pitched slightly toward drain connections.

FIGURE 3

Furnace Attachment

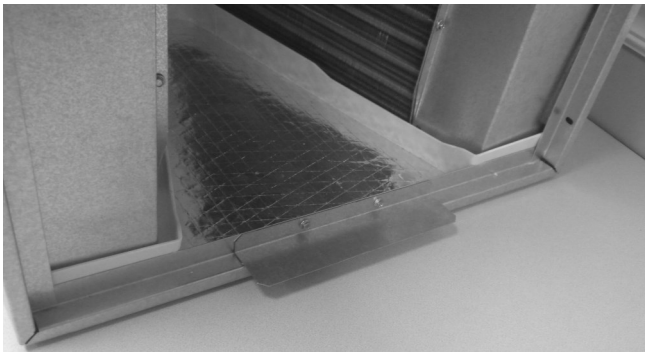

PLENUM CONNECTIONS

Options for Duct Takeoffs

1. Existing or field-fabricated plenum—remove entire end panel and attach to plenum.
2. Flex duct connections—cut holes into coil duct board for duct connections. Use only tab-style takeoffs; adhesive-style takeoffs may delaminate the duct board facing.

Balancing Airflow

- Use the same number and size of takeoffs on the left and right sides of coil.
- Use end takeoffs after the left and right sides are balanced.
- Locate takeoffs as close as possible to the downstream end of plenum coil.

Cutting Duct Takeoffs

- Cut exposed duct board surfaces.
- Do not cut into sheet metal—coil damage will result.
- Duct board is 1" thick; do not cut more than ¾" deeper to prevent coil damage.
- Cut carefully with sharp cutting tool to minimize delaminating the foil lining; ensure there is no exposed fiberglass in the airstream.

SECONDARY DRAIN PAN

Pan attachment

- Align secondary drain pan tab holes with locator embossments on bottom of coil (Figure 4); pan should be pitched ½" toward drain.
  - ◊ Attach the secondary pan tabs to the upper pilot holes on the non-drain side of the coil.
  - ◊ Attach the secondary pan tabs to the lower pilot holes on the drain side to provide the proper pitch.
- Attach secondary pan with sheet metal screws.
- Route the drain line per local codes.

FIGURE 4

Locator Embossments for Secondary Pan

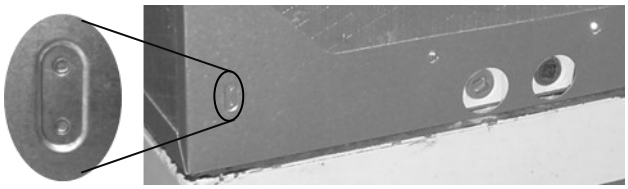

CONDENSATE DRAIN

Coils are equipped with multiple drain connections. Determine the drain connections to be used and note the difference between the primary (green) and secondary (red) openings. Drain plugs are provided for all openings; remove and discard the appropriate plugs with ½" drive ratchet and verify that remaining plugs are tight (2.5 ft-lbs). Attach drain line to pan with ¾" male pipe thread PVC fittings. Hand tight is adequate. **Do not over tighten & do not reduce drain line size!**

Route drain line(s) so they will not be exposed to freezing temperatures and do not interfere with accessibility to the coil, air handling system or filter. The drain should be pitched downward 1" per 10' with a 2" trap as close to the coil as possible. If line makes a second trap, or has an extended run before termination, a vent tee should be installed after the trap closest to the pan. See Figure 5.

If the coil is located in or above a living space where damage may result from condensate overflow, a separate ¾" drain must be provided from the secondary drain connection. Run this drain to a place in compliance with local installation codes where it will be noticed when unit is operational. Condensate flowing from the secondary drain indicates a plugged primary drain. Prime the trap with water. Test line for leaks. Test water flow with unit in operation. **A secondary drain pan should also be installed under the unit as specified by most local building codes.**

FIGURE 5

Drain Trap and Vent Tee

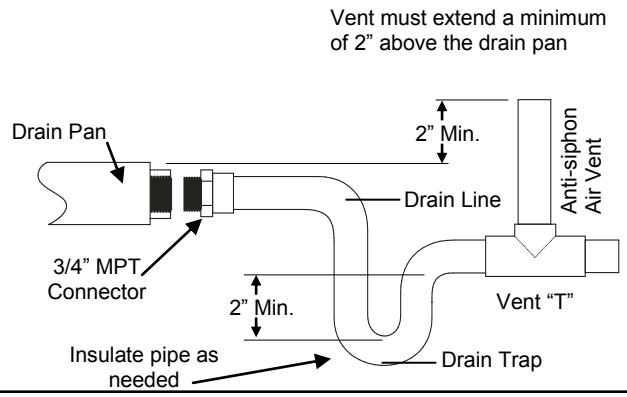

FIGURE 6

Drain Nipple

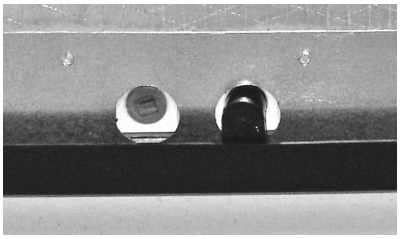

Drain Pan Configuration Options (these do not supersede local codes)			
Option	**Primary Drain (Green Plug)**	**Secondary Drain (Red Plug)**	**Secondary Pan Drain (Black Pan)**
1	As shown in Fig 6	Drain to noticeable area per local codes	Route per local codes
2	As shown in Fig 6	Drain into secondary pan using provided drain nipple (see Figure 6)	Route per local codes
3	As shown in Fig 6	Connect with TEE to the secondary drain pan	Route per local codes

REFRIGERANT LINE INSTALLATION

ADP recommends installing a filter drier and sight glass in the liquid line. While brazing, purge the system with nitrogen to prevent contamination. ADP recommends reattaching and insulating the TXV sensing bulb at a 10 to 2 o'clock position on the suction line, outside the coil housing, no more than one foot from the connection. Evacuate the system to 500 microns to ensure proper air and moisture removal *(***Note:** *Deep evacuation or triple evacuation method recommended).* Open the suction service valve slowly and allow the refrigerant to bleed into the system before opening the liquid service valve.

REFRIGERANT CHARGING INSTRUCTIONS [1]

When charging in cooling mode, the outdoor temperature should be 60°F or higher. To allow the pressures to stabilize, operate the system a minimum of 15 minutes between adjustments. When adjusting charge to systems with micro-channel outdoor coils, make small (1 ounce or less) adjustments as these systems are very sensitive to refrigerant charge.

TXV Charging[2, 3, 4] – Use the charging method recommended by the outdoor unit instructions. Alternatively, ADP recommends charging to 12°F sub-cooling for AC units and 10°F sub-cooling for heat pump units. In addition, if equipped with an adjustable valve, adjust to 10°F superheat.

Fixed Orifice Charging[2, 3, 4] – Use the superheat recommended by the outdoor unit instructions. Alternatively, ADP recommends charging to the superheat table below.

Outdoor Air Temp. (°F)	**60**	**65**	**70**	**75**	**80**	**85**	**90**	**95**	**100**	**105**	**110**	**115**
Superheat (°F)	31	28	25	22	20	16	13	10	8	6	5	5

For heat pump units initially charged in the cooling mode, final adjustments to charge in the heating mode are acceptable if necessary. Some heat pump units require charging in the heating mode. In this case, refer to the outdoor instructions for recommended charging procedures.

If the system is undercharged after the initial charge, add refrigerant until the sight glass is clear and recommended pressures, temperatures, sub-cooling and superheat can be obtained. If the system is overcharged after the initial charge, recover refrigerant until recommended pressures, temperatures, sub-cooling and superheat can be obtained.

Notes:

1. If any problems or questions regarding charge occur, contact customer service.
2. OEM charging methods vary depending on design and application. Verify all recommended pressures, temperatures, sub-cooling and superheat settings result in the proper charge.
3. ADP coils may require charge compensation due to size variation versus the OEM coil.
4. Temperatures are ±2°F unless otherwise recommended.

IMPORTANT

The Clean Air Act of 1990 bans the intentional venting of refrigerant (CFC's and HFC's). Approved methods of reclaiming must be followed. Fines and/or incarceration may be levied for non-compliance.

ADP LIMITED WARRANTY

Term of Warranty

Advanced Distributor Products (ADP) warrants that products sold shall be of merchantable quality, free of defects in material and workmanship, under normal use and service, for a period of five (5) years from the date of installation, ***not*** to exceed six (6) years from the date of manufacture subject to the terms of ADP's limited warranty.

For information on this product's warranty, including accessing complete warranty terms, registering for an extended warranty* or instructions on filing a warranty claim, please go to www.ADPwarranty.com.

* *In such states or provinces where registration requirements are prohibited, failure to complete registration by the consumer does not diminish his or her warranty rights.*

Equipment Information

Please *complete information below and retain this warranty for records and future reference.*

*Unit Model Number:*_____

*Serial Number:*_____

*Installing Contractor:*_____

Installation Date: _____

*Phone:*_____

Advanced Distributor Products®

2175 West Park Place Boulevard
Stone Mountain, GA 30087
www.adpnow.com